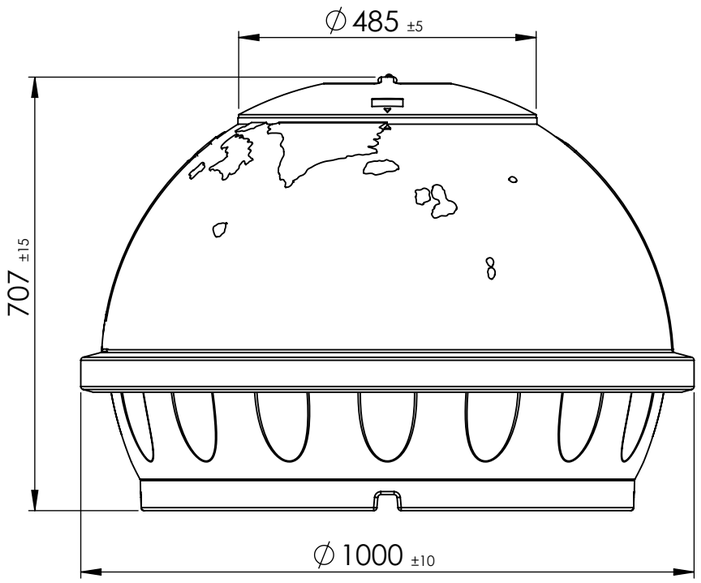

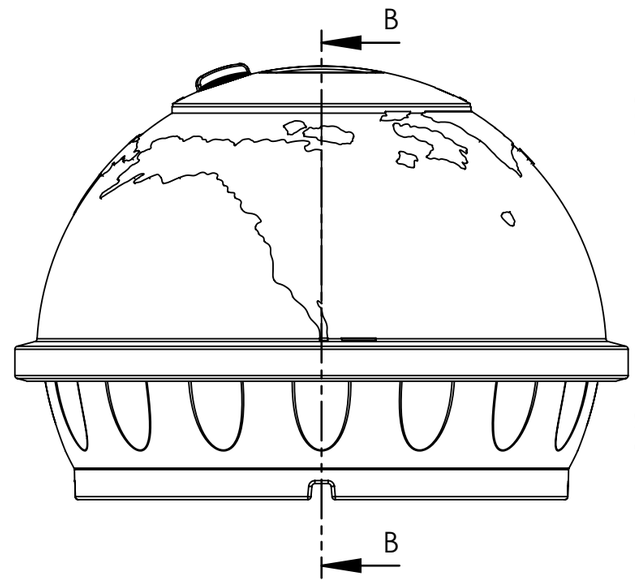

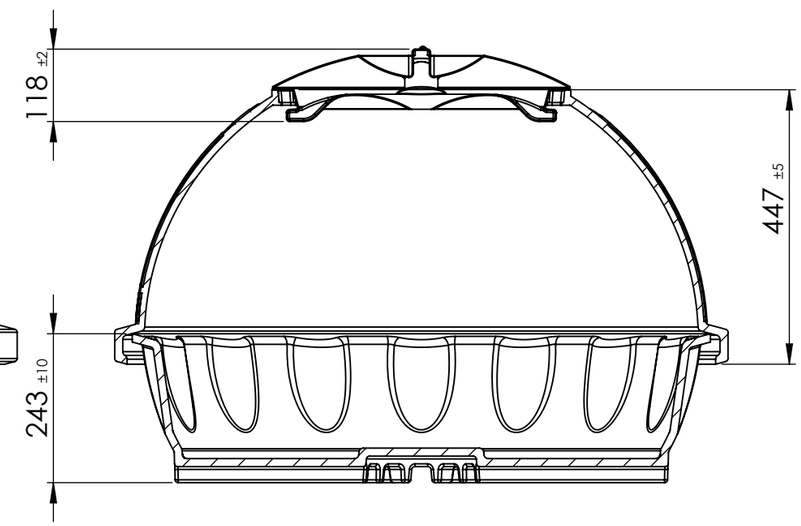
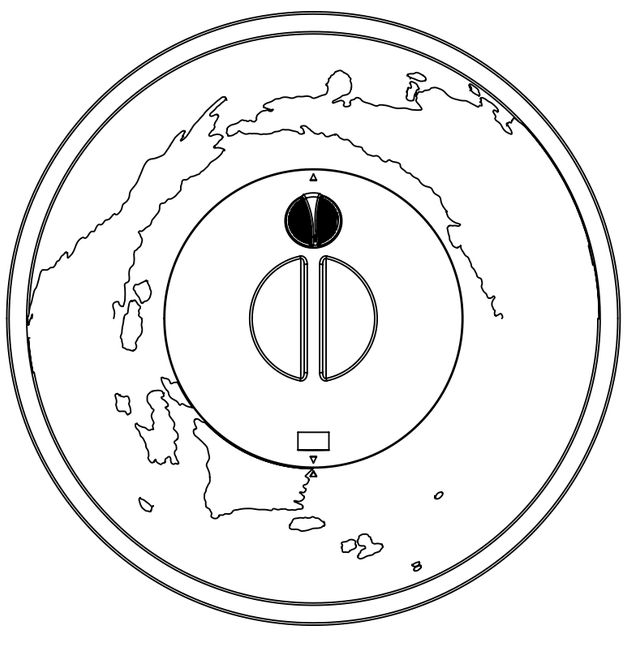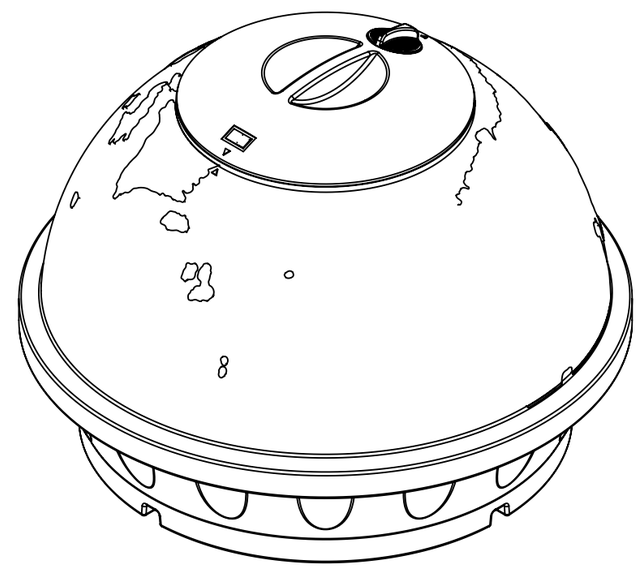
SECTION B-B